ALU_HW3
說明、注意事項

Due Day: 2025/11/23 23:59

Department of Computer Science and Engineering
National Sun Yat-sen University

TA's E-mail: m133040045@g-mail.nsysu.edu.tw 丁祥益
LAB: VLSI 5015

2025.11.3

1. Description_ALU_HW3_...
2. Supplement_ALU_HW3_...
3. Submission_Guidelines_ALU_HW3_...
4. Prime_Time_2025.pdf
5. Clock_Gating_2025.pdf

Outline

1. 測試資料
2. 繳交檔案
3. 評分標準
4. Appendices

1. 測試資料

FP32.txt:

```
        x1          x2        x3        x4        y1        y2        y3        y4
dec     ->6.562642 8.189377 -4.48312 -0.91244 -3.39812 8.036976 -7.35588 -8.63563
float32 ->40d20129 410307b0 c08f75ad bf6995b3 c0597aba 41009774 c0eb6363 c10a2b8b
```

(FP16.txt 格式同上)

Note:
Answer(標準答案)請自行產生(Verilog, C/C++, python etc.)。
可能會與硬體輸出結果有誤差，請在報告中說明你如何產生標準答案，以及存在誤差的可能原因。

2. 繳交檔案 (1/2)

- Code and generated files → Submit to the server

cp -r /MasterClass/M143040045_ALU/HW1/ /MasterClass/Homework-Submit/M143040045_ALU/

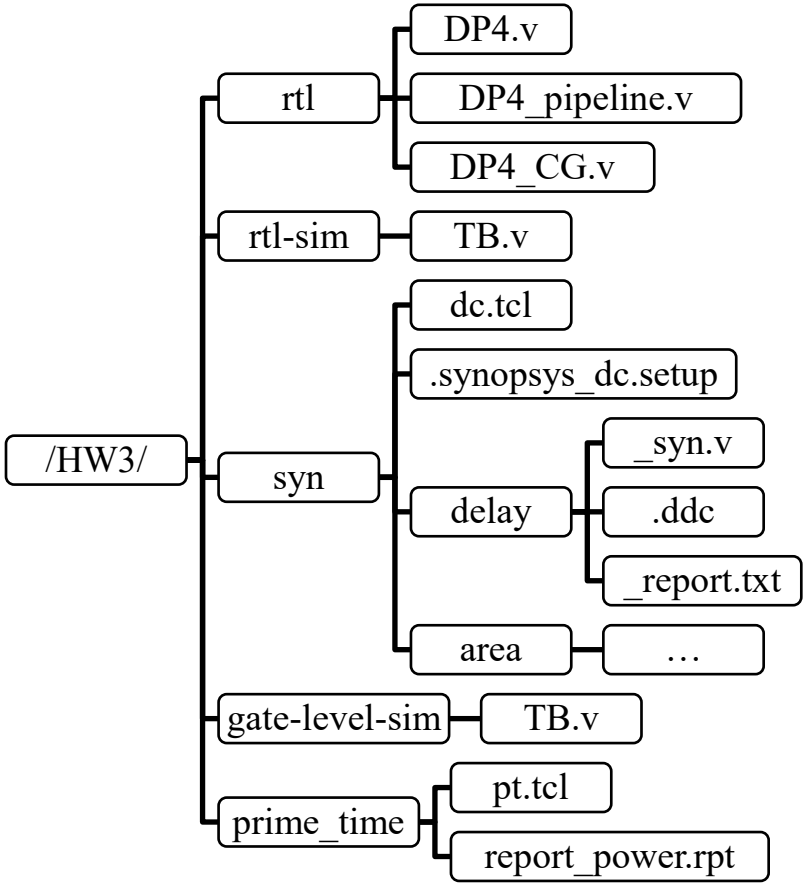

Note:

1. Multi-precision hardware
2. Power-oriented: half-precision 和 single-precision各有一份 report_power_average.rpt

2. 繳交檔案 (2/2)

- Report→ Submit to E-Learning platform (new)
  1. 硬體架構圖和說明 (pipeline registers的位置，以及各階內包含的電路)
  2. Data Table (Appendix 1)
  3. Pipelined Timing Table (Appendix 2，標示critical path於哪一階)
  4. Clock Gating Ratio Table (Appendix 3)
  5. 對於clock gating電路，比較half-precision和single-precision的power資訊 (.rpt，Appendix 4)
  6. 說明你驗證硬體答案的方式，是否有誤差? 誤差怎麼來的?
  7. non-pipelined/pipelined/clock-gating 波型圖
  8. 其他，例如，做了什麼特別的設計，優化了電路。

Note: 繳交 student ID_ALU_hw3.pdf

3. 評分標準

- (60%) Clock gating design, Prime time report, clock gating ratio
- (20%) Testbench, Simulation results (pipeline/non-pipeline), Synthesis results(pipeline/non-pipeline/clock-gating) (.ddc、.v、.sdf、.sdc)
- (20%) Final report which contains the aforementioned information

Appendices
(僅供參考)

Appendix 1 --- Data Table

		Area(um^2)			Delay(ns)	latency(ns)	Power(uW)		
		CL	SL	Total			Dynamic	Static	Total
Non-pipelined (DC)	delay					-			
	area					-			
	mid					-			
Non-pipelined (Prime Time)	delay	-	-	-	-	-			
Pipelined (DC)	delay								
	area								
	mid								
Pipelined (Prime Time)	delay	-	-	-	-	-			
Clock-gated (DC)	delay								
	area								
	mid								
Clock-gated (Prime Time)	delay	-	-	-	-	-			

Appendix 2 --- Pipelined Delay Table

pipeline		
	delay	area
stage1		
stage2		
stage3		
stage4		

clock-gating		
	delay	area
stage1		
stage2		
stage3		
stage4		

Appendix 3 --- Clock-gating Ratio Table

Clock Gating Summary

Number of Clock gating elements	1
Number of Gated registers	128 (23.84%)
Number of Ungated registers	409 (76.16%)
Total number of registers	537

Appendix 4 --- report_power_average (.rpt)

```
Hierarchy                                  Int      Switch   Leak     Total
                                           Power    Power    Power    Power    %
-------------------------------------------------------------------------------
top                                        6.08e-04 4.38e-04 2.28e-04 1.27e-03 100.0
  a1_h (adder_2)                           2.65e-05 6.40e-05 1.63e-05 1.07e-04   8.4
    r328 (adder_2_DW01_add_0)              5.93e-06 5.53e-06 2.38e-06 1.38e-05   1.1
    r329 (adder_2_DW01_sub_0)              6.53e-06 6.60e-06 2.89e-06 1.60e-05   1.3
    r330 (adder_2_DW_cmp_0)                5.26e-07 2.83e-06 4.73e-07 3.82e-06   0.3
  a2_h (adder_1)                           4.82e-06 5.34e-06 2.81e-06 1.30e-05   1.0
    r328 (adder_1_DW01_add_0)              4.36e-06 3.02e-06 2.14e-06 9.52e-06   0.7
    r329 (adder_1_DW01_sub_0)              5.93e-06 5.53e-06 2.38e-06 1.38e-05   1.1
    r330 (adder_1_DW_cmp_0)                4.36e-06 3.02e-06 2.14e-06 9.52e-06   0.7
  a3_h (adder1_1)                          9.66e-07 2.78e-08 5.16e-08 1.05e-06   0.1
    r328 (adder1_1_DW01_add_0)             4.82e-06 5.34e-06 2.81e-06 1.30e-05   1.0
    r329 (adder1_1_DW01_sub_0)             4.36e-06 3.02e-06 2.14e-06 9.52e-06   0.7
    r330 (adder1_1_DW_cmp_0)               6.87e-06 6.51e-06 2.12e-06 1.55e-05   1.2
  p0 (pipeline0_1)                         1.32e-04 1.50e-05 6.91e-06 1.54e-04  12.1
  p2_1_h (pipeline2_1)                     3.11e-05 9.22e-07 2.14e-06 3.42e-05   2.7
  p1 (pipeline1_0)                         2.98e-05 3.30e-06 1.65e-06 3.48e-05   2.7
  p2 (pipeline1_7)                         3.02e-05 2.96e-06 1.61e-06 3.48e-05   2.7
  p3 (pipeline1_6)                         2.97e-05 3.01e-06 1.57e-06 3.42e-05   2.7
  p4 (pipeline1_5)                         3.00e-05 3.61e-06 1.68e-06 3.53e-05   2.8
  p_h (pipeline0_0)                        3.37e-06 3.77e-06 7.96e-06 1.51e-05   1.2
  clk_gate_C301 (SNPS_CLOCK_GATE_HIGH_top)
                                           6.64e-07    0.000 4.91e-08 7.13e-07   0.1
  p2_1 (pipeline2_0)                       3.66e-05 4.67e-06 1.93e-06 4.32e-05   3.4
  p0m (pipelinem_0)                        9.66e-07 2.78e-08 5.16e-08 1.05e-06   0.1
  n32 (normal32)                           1.58e-06 6.57e-06 5.76e-06 1.39e-05   1.1
    add_32 (normal32_DW01_add_2)              0.000    0.000 1.42e-06 1.42e-06   0.1
  a1 (adder_0)                             2.65e-05 6.40e-05 1.63e-05 1.07e-04   8.4
    r328 (adder_0_DW01_add_0)              5.93e-06 5.53e-06 2.38e-06 1.38e-05   1.1
    r329 (adder_0_DW01_sub_0)              6.53e-06 6.60e-06 2.89e-06 1.60e-05   1.3
    r330 (adder_0_DW_cmp_0)                5.26e-07 2.83e-06 4.73e-07 3.82e-06   0.3
  a2 (adder_3)                             2.20e-05 5.78e-05 1.65e-05 9.63e-05   7.6
    r328 (adder_3_DW01_add_0)              4.36e-06 3.02e-06 2.14e-06 9.52e-06   0.7
    r329 (adder_3_DW01_sub_0)              4.82e-06 5.34e-06 2.81e-06 1.30e-05   1.0
    r330 (adder_3_DW_cmp_0)                5.62e-07 3.06e-06 5.04e-07 4.13e-06   0.3
  a3 (adder1_0)                            5.37e-05 1.46e-04 1.72e-05 2.16e-04  17.0
    r328 (adder1_0_DW01_add_0)             6.87e-06 6.51e-06 2.12e-06 1.55e-05   1.2
    r329 (adder1_0_DW01_sub_0)             1.07e-05 1.18e-05 2.90e-06 2.54e-05   2.0
    r330 (adder1_0_DW_cmp_0)               2.40e-06 1.20e-05 6.38e-07 1.50e-05   1.2
  p1m (pipelinem_2)                        9.66e-07 2.78e-08 5.16e-08 1.05e-06   0.1
  p1_h (pipeline1_4)                       2.67e-05 7.81e-07 1.76e-06 2.92e-05   2.3
  p2_h (pipeline1_3)                       2.69e-05 7.81e-07 1.81e-06 2.95e-05   2.3
  p3_h (pipeline1_2)                       2.66e-05 7.81e-07 1.73e-06 2.91e-05   2.3
  m1_h (mul_4)                                0.000    0.000 9.90e-06 9.90e-06   0.8
    mult_28 (mul_4_DW_mult_uns_0)             0.000    0.000 9.31e-06 9.31e-06   0.7
  p2m (pipelinem_1)                        9.66e-07 2.78e-08 5.16e-08 1.05e-06   0.1
  p4_h (pipeline1_1)                       2.69e-05 7.81e-07 1.81e-06 2.95e-05   2.3
  m2_h (mul_3)                                0.000    0.000 9.90e-06 9.90e-06   0.8
    mult_28 (mul_3_DW_mult_uns_0)             0.000    0.000 9.31e-06 9.31e-06   0.7
```

single-precision

```
Hierarchy                                  Int      Switch   Leak     Total
                                           Power    Power    Power    Power    %
-------------------------------------------------------------------------------
top                                        5.21e-04 5.46e-05 2.17e-04 7.92e-04 100.0
  a1_h (adder_2)                              0.000    0.000 1.41e-05 1.41e-05   1.8
    r328 (adder_2_DW01_add_0)                 0.000    0.000 2.53e-06 2.53e-06   0.3
    r329 (adder_2_DW01_sub_0)                 0.000    0.000 2.97e-06 2.97e-06   0.4
    r330 (adder_2_DW_cmp_0)                   0.000    0.000 5.35e-07 5.35e-07   0.1
  a2_h (adder_1)                              0.000    0.000 1.51e-05 1.51e-05   1.9
    r328 (adder_1_DW01_add_0)                 0.000    0.000 2.12e-06 2.12e-06   0.3
    r329 (adder_1_DW01_sub_0)                 0.000    0.000 2.78e-06 2.78e-06   0.4
    r330 (adder_1_DW_cmp_0)                   0.000    0.000 5.35e-07 5.35e-07   0.1
  a3_h (adder1_1)                             0.000    0.000 1.52e-05 1.52e-05   1.9
    r328 (adder1_1_DW01_add_0)                0.000    0.000 2.14e-06 2.14e-06   0.3
    r329 (adder1_1_DW01_sub_0)                0.000    0.000 3.36e-06 3.36e-06   0.4
    r330 (adder1_1_DW_cmp_0)                  0.000    0.000 7.43e-07 7.43e-07   0.1
  p0 (pipeline0_1)                         1.22e-04 5.02e-06 6.34e-06 1.33e-04  16.8
  p2_1_h (pipeline2_1)                     3.01e-05 1.23e-06 1.76e-06 3.31e-05   4.2
  p1 (pipeline1_0)                         2.64e-05 1.04e-06 1.49e-06 2.89e-05   3.7
  p2 (pipeline1_7)                         2.62e-05 1.04e-06 1.48e-06 2.87e-05   3.6
  p3 (pipeline1_6)                         2.59e-05 1.04e-06 1.42e-06 2.84e-05   3.6
  p4 (pipeline1_5)                         2.66e-05 1.04e-06 1.53e-06 2.92e-05   3.7
  p_h (pipeline0_0)                        1.22e-04 5.02e-06 6.35e-06 1.33e-04  16.8
  clk_gate_C301 (SNPS_CLOCK_GATE_HIGH_top)
                                           9.44e-07    0.000 5.23e-08 9.96e-07   0.1
  p2_1 (pipeline2_0)                       3.03e-05 1.23e-06 1.76e-06 3.33e-05   4.2
  p0m (pipelinem_0)                        8.49e-07 3.70e-08 5.18e-08 9.38e-07   0.1
  n32 (normal32)                           3.01e-06 1.80e-05 5.81e-06 2.68e-05   3.4
    add_32 (normal32_DW01_add_2)           4.49e-07 1.48e-06 1.43e-06 3.36e-06   0.4
  a1 (adder_0)                                0.000    0.000 1.53e-05 1.53e-05   1.9
    r328 (adder_0_DW01_add_0)                 0.000    0.000 2.30e-06 2.30e-06   0.3
    r329 (adder_0_DW01_sub_0)                 0.000    0.000 2.74e-06 2.74e-06   0.3
    r330 (adder_0_DW_cmp_0)                   0.000    0.000 5.27e-07 5.27e-07   0.1
  a2 (adder_3)                                0.000    0.000 1.58e-05 1.58e-05   2.0
    r328 (adder_3_DW01_add_0)                 0.000    0.000 2.08e-06 2.08e-06   0.3
    r329 (adder_3_DW01_sub_0)                 0.000    0.000 2.70e-06 2.70e-06   0.3
    r330 (adder_3_DW_cmp_0)                   0.000    0.000 5.27e-07 5.27e-07   0.1
  a3 (adder1_0)                               0.000    0.000 1.57e-05 1.57e-05   2.0
    r328 (adder1_0_DW01_add_0)                0.000    0.000 2.07e-06 2.07e-06   0.3
    r329 (adder1_0_DW01_sub_0)                0.000    0.000 2.77e-06 2.77e-06   0.4
    r330 (adder1_0_DW_cmp_0)                  0.000    0.000 7.36e-07 7.36e-07   0.1
  p1m (pipelinem_2)                        8.49e-07 3.70e-08 5.18e-08 9.38e-07   0.1
  p1_h (pipeline1_4)                       2.59e-05 1.04e-06 1.44e-06 2.84e-05   3.6
  p2_h (pipeline1_3)                       2.61e-05 1.04e-06 1.48e-06 2.86e-05   3.6
  p3_h (pipeline1_2)                       2.58e-05 1.04e-06 1.42e-06 2.83e-05   3.6
  m1_h (mul_4)                                0.000    0.000 9.93e-06 9.93e-06   1.3
    mult_28 (mul_4_DW_mult_uns_0)             0.000    0.000 9.34e-06 9.34e-06   1.2
  p2m (pipelinem_1)                        8.49e-07 3.70e-08 5.18e-08 9.38e-07   0.1
  p4_h (pipeline1_1)                       2.61e-05 1.04e-06 1.48e-06 2.86e-05   3.6
  m2_h (mul_3)                                0.000    0.000 9.93e-06 9.93e-06   1.3
    mult_28 (mul_3_DW_mult_uns_0)             0.000    0.000 9.34e-06 9.34e-06   1.2
```

half-precision

叮嚀:

1. 不要到最後一週才開始做。
2. 有疑問一律先寄e-mail詢問。
3. TA Office Time: (三)、(四)、(五) 14:00~17:00